PD1000

PRODUCT INTRODUCTION

MAIN FEATURES:
Full power parameter measurement, Energy Metering, Harmonic monitoring, Limit alarm, Switch Status Monitoring

APPLICATIONS:
Energy Management, Power Monitoring

DIMENSIONS

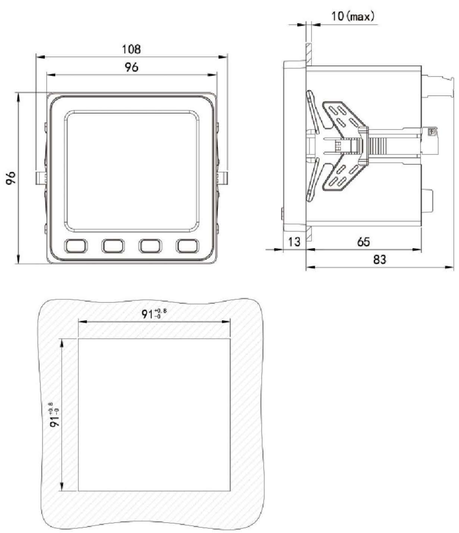

TERMINALS AND TYPICAL WIRING

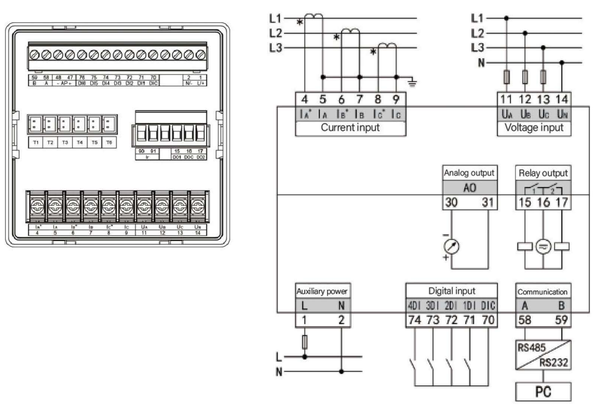

TECHNICAL SPECIFICATION

Function	PD1000			
Display method	● LCD display			
Real-time measurement	● Three-phase voltage	● Three-phase current	● Neutral current	● Active power
	● Reactive power	● Apparent power	● Frequency	● Demand
	● Max、Min、Average value	● Phase angle、Ordinal component	○ Temperature（6 channels）	
Energy Metering	● Bi-directional total active energy		● Bi-directional total active energy	
	● Four-quadrant reactive energy	● Apparent energy	○ Tariff energy（6 sets）	
Power quality monitoring	● Voltage unbalance	● Current unbalance	● THDu	● THDi
	● 2nd-31st harmonic content	● Voltage crest factor	● Current K factor	
	● RS485 communication interface(1channel)		○ Digital input(4channels)	
	○ Relay output(2channels)		○ Analog output(1channel)	
Others	● Limit alarm	○ Data record	○ Freezing data	● Communication Address Mapping

[NOTE1]: "●" Yes, "○" Optional.
The model suffix represents the optional function.
C: RS485, M: Analog output, J: Relay output, K: Digital input, T: temperature input, A: Residual current input.
For example: PD1000-CK

[NOTE2]: When one of the functions of tariff energy, data recording and freezing data is selected, the other two functions are available at the same time.

TECHNICAL SPECIFICATION

Environmental features	
Operating temperature	-25°C...+55°C
Storage temperature	-25°C...+70°C
Relative humidity	5%...95%RH,no condensation
Working altitude	⩽ 2000m CAT III
Pollution level	2
Mechanical features	
Dimension	96mm×96mm×83mm
IP	Front IP54，Back IP20
Security features	
Measurement category	300V (CAT III)
Safety	IEC 61010-1,double insulation
Auxiliary power	
Voltage	AC/DC 80V...270V
Frequency	50/60Hz ± 5Hz
Power consumption	⩽ 5VA
Voltage input	
Rated value	230/400 VAC
Startup value	10V
Resolution	0.1 V
Impedance	⩾ 1.7 MΩ/phase
Power consumption	⩽ 0.1 VA /phase
Overload	continued：1.2Vn,instant：2Vn/1min
Frequency	45Hz-65Hz
Current input	
Rated value	1A or 5A
Startup value	10mA
Resolution	1mA
Impedance	⩽ 20mΩ/phase
Power consumption	⩽ 0.2 VA/phase
Overload	continued：2In，instant：20In/1s

Digital input	
Quantity	4
Type	Dry contact, built-in DC 24V
Relay output	
Quantity	2
Contact rating	AC 250V/5A or DC30V/5A
Analog output	
Quantity	1
Type	4...20mA，4...12...20mA
Load capacity	⩽ 500Ω
Temperature	
Quantity	6
Measuring range	-20℃~140℃
Measurement error	±2℃
Residual current	
Quantity	1
Rated value	AC 1000mA/0.5mA
Communication Interface	
Quantity	1
Interface	RS485
Rate	2400bps...115.2kbps
Protocol	Modbus-RTU，DL/T 645
Real Time Clock	
clock drift	⩽ 0.5s/day
Terminal	
Tightening torque	0.5Nm
Standard	
IEC 61557-12	Performance Measurement and Monitoring Devices
IEC 61010-1	Electrical Safety
IEC 61326-1	Electromagnetic Compatibility
Insulation	IEC61010-1
Certificate	CE
Active energy	IEC62053-22